PROFESSIONAL LAUNDRY

# Washer extractor

## N7-105

### Features and benefits

- **Intelligent controller offers:**
  - Large display and one control knob for easy program selection
  - Language selection
  - Create new programs in your PC with the Laundry Program Manager, then transfer them to machines via USB port
  - Wash program packages optimized on Economy, Performance and Time. (Available on general programs)
  - By using the Laundry Program Manager tool you can edit and create new programs to adapt to the requirements of your business
- Low water and energy consumption – see table below
- Four compartment detergent box for manual dosing of powder or liquid detergent
- High extraction force for efficient dewatering
- Door with gasket and strong hinges built for heavy duty operation
- Stainless and galvanized steel in all vital parts for high degree of rust protection
- **Proven robustness:**
  - Maximises the extraction force, leading to highest dewatering and savings in drying
    Minimizes the stress on the machine, leading to trouble-free operation and increased machine lifetime
    Reduces vibrations, making it possible to install the machine in all locations

*Images shown are a representation of the product only and variations may occur.*

### Main options

- Automatic liquid detergent supply (optional I/O board)
- Stainless steel front panel
- Connection to booking- /payment- system or coin meter
- Drain pump

| Main specifications | | N7–105 | |
|---|---|---|---|
| Max. capacity, filling factor 1:9 | kg/lb | 11/25 | |
| Drum, volume | litre | 105 | |
| Drum, diameter | ø mm | 595 | |
| Extraction | rpm | 625 | |
| G-factor | | 130 | |
| Standard heating alternatives | electricity, kW | 7.5 | |
| Other energy heating alternatives | electricity, kW | 3.0 / 10.0[1] | |
| | steam | x | |
| | non-heated | x | |
| **Consumption data "Normal 60°C" Economy**[2] | | El | Steam[3] |
| Total time | Min | 45 | 45 |
| Water consumption (cold+hot) | litre | 61+19 | 80+0 |
| Energy consumption (motor/heating/hot water) | kWh | 0.15/0.55/1.2 | 0.15/- |
| Steam consumption | kg | - | 2.6 |

1. Special requirement on request.
2. Water temperature 15°C cold water and 65°C hot water.
3. Depending on steam pressure.

Produced according to ISO 9001 and ISO 14001.
Certified with CB certificate for Low Voltage Directive and S-mark according to the Machinery Directive. Protection class IP X4D.

| Electrical connections | | | | | |
|---|---|---|---|---|---|
| Heating alternative | Main voltage | Hz | Heating power kW | Total power kW | Recommen-ded fuse A |
| Electric heated | 220-240V 1/1N~ | 50/60 | 3.0/7.5/10.0 | 3.5/7.9/10.4 | 16/35/50 |
| | 220-240V 3~ | 50/60 | 3.0/7.5/10.0 | 3.5/7.9/10.4 | 16/25/33 |
| | 380-415V 3/3N~ | 50/60 | 3.0/7.5/10.0 | 3.4/7.9/10.4 | 10/16/20 |
| | 440V 3~ | 50/60 | 7.5/10.0 | 7.9/10.4 | 16 |
| | 480V 3~ | 60 | 10.0 | 10.4 | 16 |
| Non heated/Steam heated | 208-240V 1/1N~ | 50/60 | [1] | 0.8 | 10 |
| | 380-480V 1~[2] | 50/60 | [1] | 0.8 | 10 |

1. Total power and recommended fuse does not depend on the heating power in those cases.
2. Prepared for 3~

| Water and steam connection[1] | | N7-105 |
|---|---|---|
| Water valves | DN | 20 |
| Water pressure | kPa | 200–600 |
| Capacity at 300 kPa | l/min | 20 |
| Drain valve | ø mm | 75 |
| Draining capacity | l/min | 170 |
| Steam valve | DN | 15 |
| Steam pressure | kPa | 300–600 |
| Liquid detergent supplies | | 5 |
| **Floor requirements** | | |
| Frequency of the dynamic force | Hz | 9.1 |
| Floor load at max extraction | kN | 1.9 ± 3.2 |
| **Sound levels** | | |
| Sound power/pressure level at extraction[2] | dB(A) | 68/53 |
| Sound power/pressure level at wash[1] | dB(A) | 62/47 |
| **Heat emission** | | |
| % of installed power, max | | 5 |
| **Shipping data[3]** | | |
| Weight | net, kg | 152 |
| Shipping volume | $m^3$ | 0.88 |
| **Accessories** | | |
| Steel base | | x |
| Hose kits for water or steam | | x |
| Fluff collector | | x |

1. Operating panel
2. Door opening ø 365 mm
3. Detergent box
4. Cold water
5. Hot water
6. Re-used water
7. Drain
8. Liquid detergent supply
9. Electrical connection
10. Steam connection
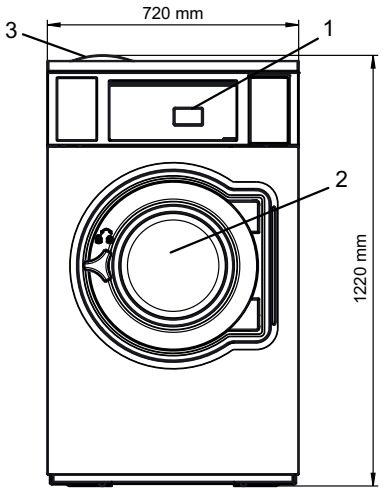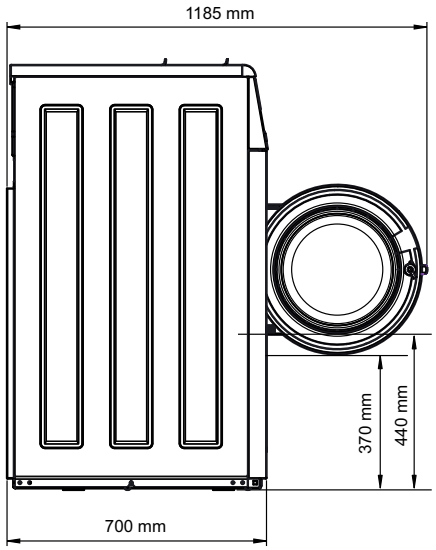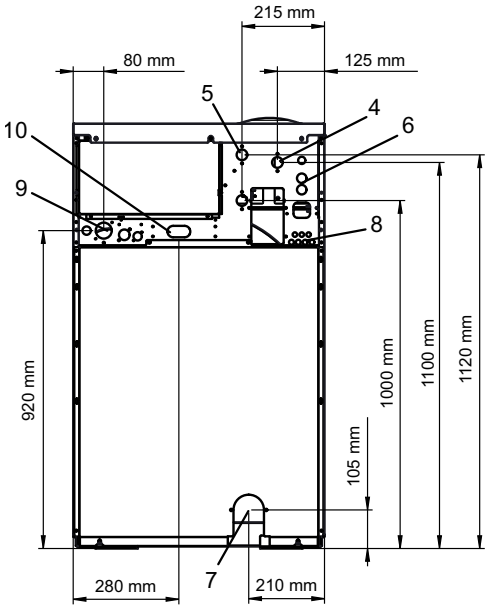
1. The washer extractor is equipped with a built-in type AB airgap according to EN 61770. Maximum working pressure for Australia is 800 kPa.
2. Sound power levels measured according to ISO 60704.
3. Average data. Crated weight/shipping volume depends on configuration. Please contact logistics for exact measures.